980nm / PBS/PBC

PBS/PBC

,

	nm	980
	nm	±20
	dB	0.35
	dB	0.6
	dB	22
	dB	50
	dB	50
CW	W	5 10 20 30
	KW	10
	-	Ports 1&2:PM980;Port 3:Hi1060 or PM980
	m	1
	-	
	N	5

25 0.6dB, 5dB, 2dB,

Key

1W

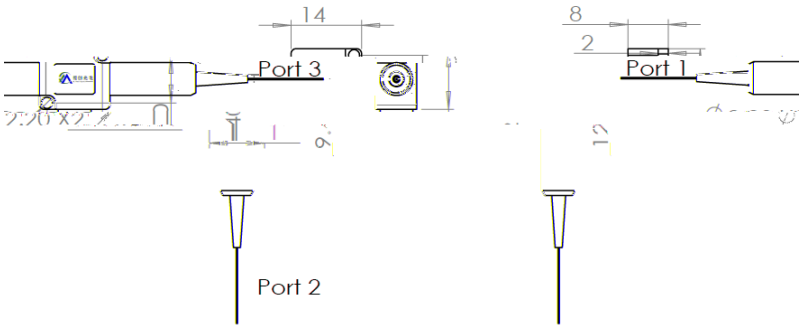

			Port1&2	Port3			
MCHPBS/C	980-980nm	5-5W 10-10W S-	P9-PM980	H1-Hi1060 P95-PM980 45 Port 1 P90-PM980 Port 1	08-0.8m 10-1.0m 15-1.5m S-	B-250um L-900um S-	N-None

MCHPBS-980-5-P9-P90-10-L-N

980nm 5W Port1&2 PM980 Port3 PM980 Port 1 1 900um