# 1550nm / PBS/PBC

PBS/PBC

,

| | | |
|---|---|---|
| | nm | 1550 |
| | nm | ±40 |
| | dB | 0.3 |
| | dB | 0.5 |
| | dB | 22 |
| | dB | 50 |
| | dB | 50 |
| CW | W | 5 10 20 30 |
| | KW | 10 |
| | - | Ports 1&2:PM1550;Port 3:SMF-28e or PM1550 |
| | m | 1 |
| | - | |
| | N | 5 |
| | mm | 14x12x8 |
| | | -5 +70 |
| | | -40 +85 |

25

0.6dB, 5dB, 2dB, Key

1W

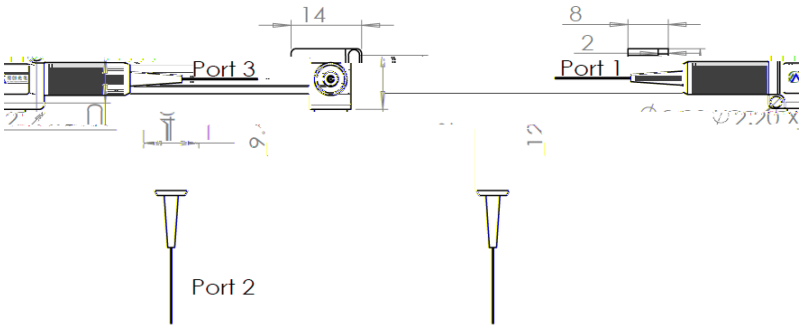

| | | | | | | | |
|---|---|---|---|---|---|---|---|
| | | | Port1&2 | Port3 | | | |
| MCHPBS/C | 1550-1550nm<br>S- | 5-5W<br>10-10W<br>S- | P15-PM1550 | S2-SMF-28e<br>P155-PM1550 45 °<br>Port 1<br>P150-PM1550<br>Port 1 | 08-0.8m<br>10-1.0m<br>15-1.5m<br>S- | B-250um<br>L-900um<br>S- | N-None |

MCHPBS-1550-5-P15-P150-10-L-N

1550nm 5W Port1&2 PM1550 Port3 PM1550

Port 1 1 900um